PART NO. 2165

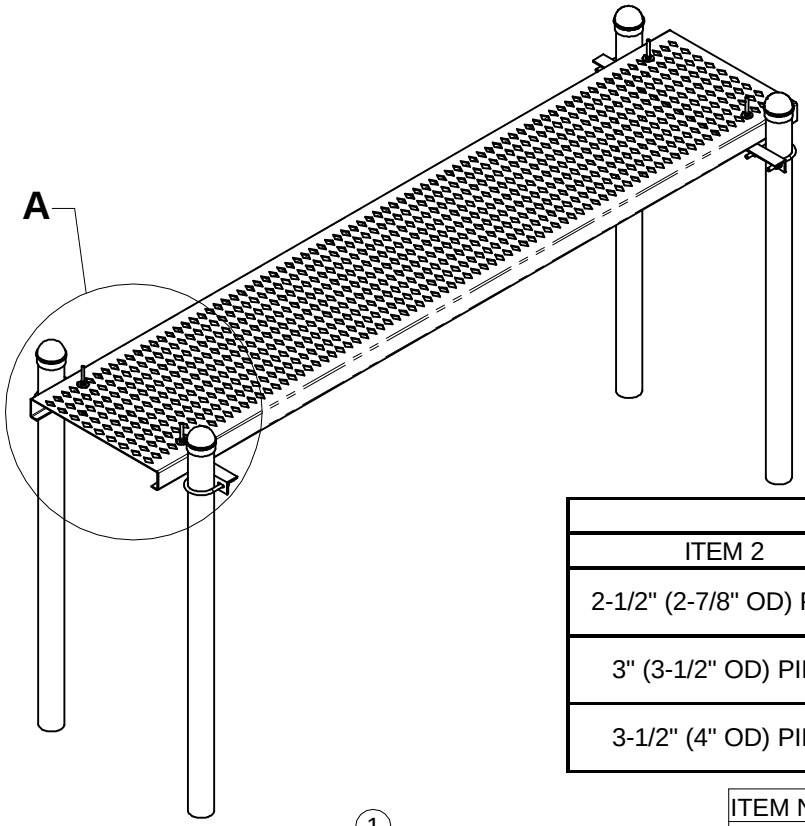

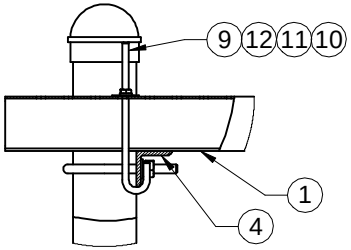

JBOLT ASSY

1 SEE PACKING SLIP FOR PIPE, CAP AND U-BOLT SIZES.

2. TRAPEZE DETAILS OMITTED FOR CLARITY. SEE TRAPEZE INSTALLATION DRAWING FOR MOUNTING INFORMATION.

CAP AND U-B0LT SIZE			
ITEM 2	ITEM NO.	PART NO.	DESCRIPTION
2-1/2" (2-7/8" OD) PIPE	5	4499G-2G	U-BOLT, 2-1/2" (2.875" OD) PIPE, GALV (1/2" DIA)
	3	5202-2.5	GALV POST CAP, 2-7/8" OD PIPE
3" (3-1/2" OD) PIPE	5	4499G	U-BOLT, 3" (3.5" OD) PIPE, GALV (1/2" DIA)
	3	5202-3	GALV POST CAP, 3-1/2" OD PIPE
3-1/2" (4" OD) PIPE	5	4499-3G	U-BOLT, 3-1/2" (4" OD) PIPE, GALV (1/2" DIA)
	3	5202-3.5	GALV POST CAP, 4" OD PIPE

SEE JBOLT ASSY

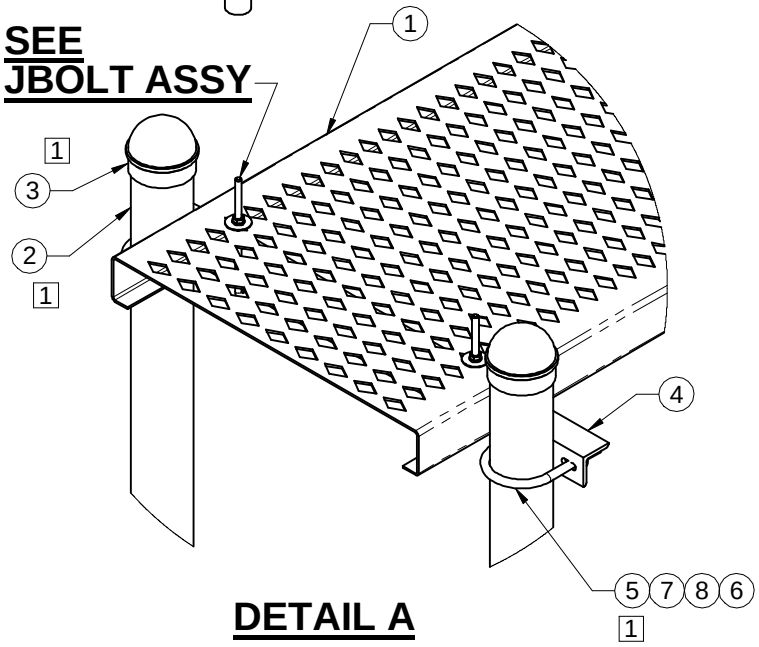

DETAIL A

ITEM NO.	QTY.	PART NO.	DESCRIPTION
1	1	2160-24-301012HDG	GRIP STRUT, 24" WIDE X 3" DEEP X 10' LONG
2	4	SEE TABLE 1	PIPE, 2-7/8" OD, 3-1/2" OD OR 4" OD SCHED 40
3	4	SEE TABLE 1	GALV POST CAP
4	2	7000-2167	SUPPORT ANGLE, ICE BRIDGE
5	4	SEE TABLE 1	U-BOLT, PIPE, GALV (1/2" DIA)
6	8	4650G	NUT, 1/2" HEX, A563 GALV
7	8	4750G	WASHER, 1/2" NARROW, GALV
8	8	4754G	WASHER, 1/2" RGLR LOCK, GALV
9	4	4480G	J-BOLT, 3/8" X 7-3/4"
10	4	4720FG	WASHER, FENDER, 3/8" GALV
11	4	4724G	WASHER, 3/8" RGLR LOCK,GALV
12	4	4621G	NUT, 3/8" HEX, GALV

THE INFORMATION CONTAINED IN THIS DRAWING IS THE SOLE PROPERTY OF ALT. ANY REPRODUCTION IN PART OR WHOLE WITHOUT THE WRITTEN PERMISSION OF ALT IS PROHIBITED.

8/15/2003

CAD GENERATED DRAWING, DO NOT MANUALLY UPDATE

APPROVALS		DATE
DRAWN	CDM	08/02/03
CHECKED	JMD	08/14/03
ENGINEER	JMD	08/14/03
ISSUED	DMR	08/15/03

800-950-7933
FAX 940-455-2817
www.altfabrication.com
sales@altfabrication.com

122 Leesley Lane
Argyle, Texas
76226

ICE BRIDGE KIT
FOUR POLE

DWG. NO. 2165

REV. A

SCALE: NTS | DO NOT SCALE DRAWING | SHEET 1 OF 1